Bunting MeTRON™ 07 Powerline

High-sensitivity metal detector for the examination of free-flowing bulk materials in pneumatic conveying pipes and free fall.
Also available with 05 controls

Reliable detection of all metals:

- Ferrous
- Stainless Steel
- Aluminum
- Copper
- Brass
- Others

Application
- Machinery Protection
- Quality Inspection

Standard Equipment
- Detection head with integral control electronics
- Control unit including power supply and display in a separate housing
- Power supply cord and connecting cable
- Manual, installation instructions, wiring diagram and parts list

Optional Equipment
- Metal detector test spheres
- Warning device
- WiFi
- Software solutions
- Remote reset button
- Power conditioner

Special Versions
- Explosion proof versions (ATEX)
- Special power supply
- Alutron version (suppression of interference signals from metalized foils or aluminum vapor foils)

Technical Data	
Power Supply	Special version 24v DC optional
Type of Protection	IP 66
Product Temperature	Max 122° F
Feed Pressure	max +/- 7 psi
Interconnecting Cables	Detector coil / control = 6 ft long
Version	Detector head and electronic box stainless steel (1.4301) Sandblasted Sensor area PE (polyethylene) food grade antistatic, FDA conformity

Sensitivity

Model	Sensitivity Steel-Ball Ø MM
50	0.25
60	0.30
80	0.40
100	0.50
120	0.80
150	0.70
200	0.80
250	1.00
300	1.20

Non Fe = Fe * 1 to 1.8; SS = Fe * 1 to 2.0

Bunting MeTRON™ 07 Powerline

Dimensions

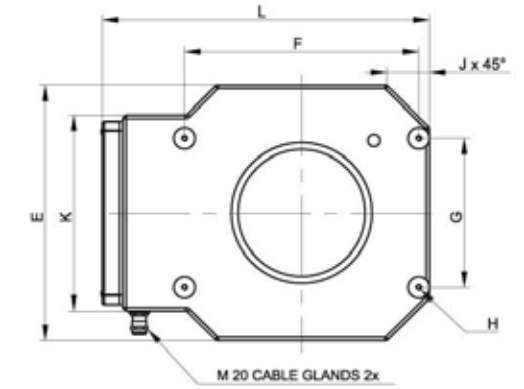

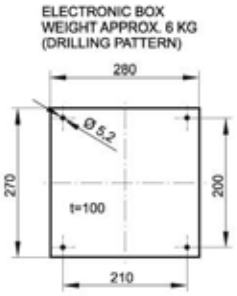

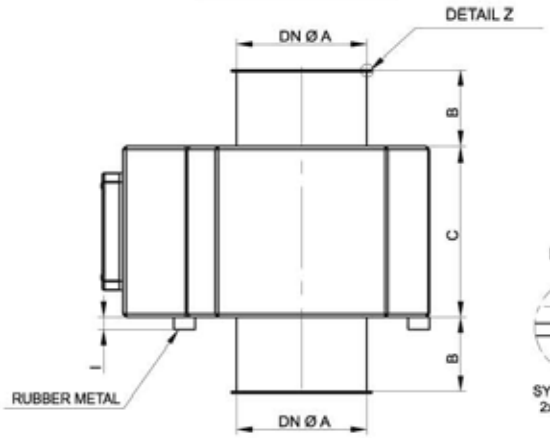

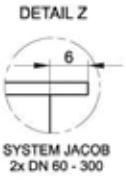

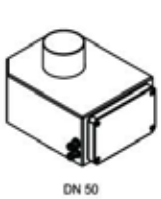

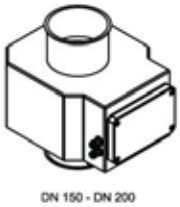

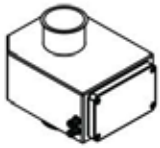

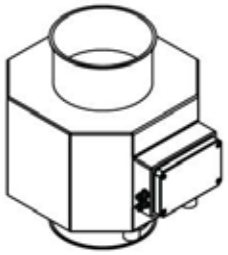

DN ØA	B	C	E	F	G	H	I	J	K	L	WEIGHT APP.
50	50	150	230	175	115	M6	15	45	230	274	16 kg
60	42	150	230	175	115	M6	15	45	230	274	19 kg
80	42	150	230	175	115	M6	15	45	230	289	22 kg
100	73	150	250	225	125	M6	15	50	250	339	25 kg
120	80	150	250	225	125	M6	15	50	250	339	28 kg
150	90	200	300	275	175	M6	15	50	230	384	30 kg
200	100	250	365	310	170	M8	30	88	230	451	35 kg
250	125	300	450	400	200	M8	30	115	230	534	40 kg
300	150	350	550	500	205	M8	30	160	230	634	45 kg

ALL DIMENSIONS IN MM.
OTHER VERSIONS ON REQUEST.

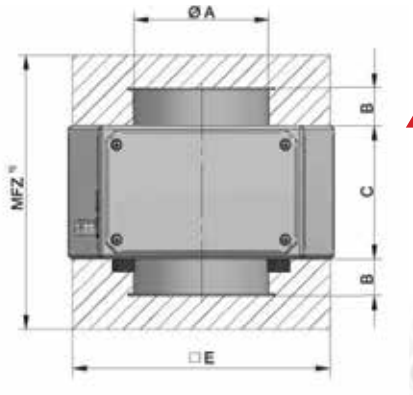

Metal Free Zone (MFZ)

Tubing, hoppers or connecting flanges made from metal can be directly connected to the detector coil (for example with a quick connect clamp) a metal free zone is not required in this case.

Calculating the “Metal Free Zone” DN 50 - DN 200
For moving metals: MFZ = 2 x B + C + 50 mm

Calculating the “Metal Free Zone” DN 250 - DN 300
For moving metals: MFZ = 2 x B + C + 100 mm